Preliminary assessment of the earthquake performance of cultural heritage assets: The case of Castle Trakošćan (Croatia)

Penava, Davorin, PhD, Associate Professor

Josip Juraj Strossmayer University of Osijek, Faculty of Civil Engineering and Architecture Osijek, Osijek, Croatia

Trajber, Domagoj, PhD student

Josip Juraj Strossmayer University of Osijek, Faculty of Civil Engineering and Architecture Osijek, Osijek, Croatia

Markušić, Sježana, PhD, Associate Professor, University of Zagreb, Faculty of Science, Department of Geophysics

Glibo, Filip, MEng student

Josip Juraj Strossmayer University of Osijek, Faculty of Civil Engineering and Architecture Osijek, Osijek, Croatia

Grgić, Filip, MEng student

Josip Juraj Strossmayer University of Osijek, Faculty of Civil Engineering and Architecture Osijek, Osijek, Croatia

Valinčić, Marin, MEng student

Josip Juraj Strossmayer University of Osijek, Faculty of Civil Engineering and Architecture Osijek, Osijek, Croatia

Zovkić, Josip, MEng student

Josip Juraj Strossmayer University of Osijek, Faculty of Civil Engineering and Architecture Osijek, Osijek, Croatia

Abstract

The 13th century Castle Trakošćan (Croatia) is a building of outstanding historical and cultural heritage significance. Since construction, the castle was subjected to structural changes, in particularly in 16th (at that time the artillery towers and the first floor was added, the central tower was raised and a courtyard with arcades was formed), 18th (around the fortress a cinquefoil of defensive structures, walls and towers is being built) and 20th century (partial retrofitting). The castle's structural system consists from irregular brick and stone unreinforced masonry walls, domes, vaults and arches, as well as of timber flooring. It is founded on a rocky peak. The building is currently used as a museum. As observed by in-situ visual inspection, the castle suffered from slight structural damage during the M5.5 (VIII EMS) and M6.2 (VIII-IX EMS) earthquakes in Croatia, which struck the city of Zagreb on 22 March 2020 and the Pokupsko-Petrinja area on 29 December 2020, respectively. In order to evaluate the earthquake performance of the "undamaged" building, and based on the information collected, the structural analysis was performed by means of a computer program. The structural modelling relied heavily on the built-in material characteristics. The compromises had to be made due to the suitability and availability of the modelling options incorporated into the computer program. The principal and critical structural weaknesses, that require detail assessment, were identified.

1. Introduction

Castle Trakošćan was built in the 13th century in northwestern Croatia as a small monitoring fortress (see *Figs. 1 and 2*). The origin of the name Trakošćan is not clear, but the theory that is accepted is that it was named after another fortress called *arx Thacorum* that stood there in antiquity (1). The castle reminds of Romanesque burgs built in the 12th and 13th century. Throughout the centuries, the castle was owned by different families and it has been renovated and upgraded multiple times. The most significant upgrade happened in 1592 when the Drašković family ordered to build the artillery towers with roofs. Looking through the historic data, it is noticeable that the castle had it's today look with the first and second floor. In the 18th century, the castle was close to destruction until the Drašković family initiated another renovation. Besides the renovation, the castle was upgraded with curtain walls. One century later, Trakošćan got its today signature look with the artificial lake, woods and a park around it that is also a tourist attraction nowadays. Today, Castle Trakošćan has been turned into a museum that is also being used for hosting festivals and other cultural activities. The museum also contains of a library which has over a thousand titles where the oldest title dates back to 1747. The books are stored in cabinets from the end of the 19th century. Visitors can, also, after the museum take a walk through the informative park that has tables with facts about the castle and the area throughout its whole lifetime.

Figure 1. Side view (left) and plan view (right) of Castle Trakošćan (1)

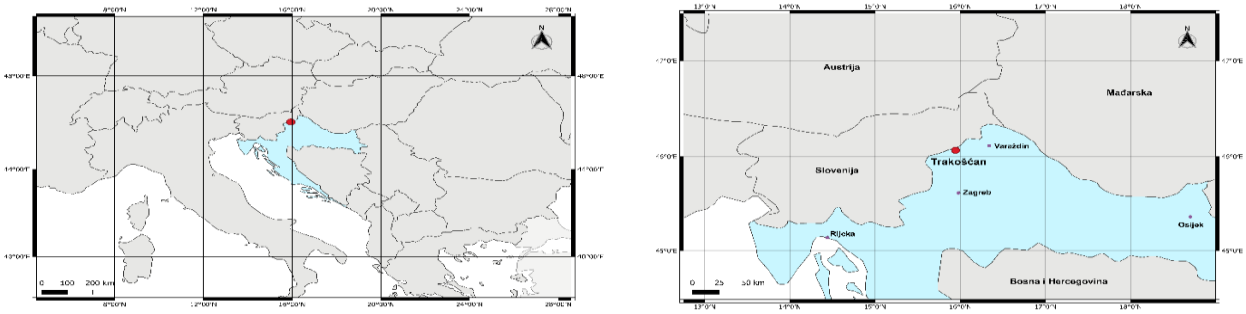

Figure 2. Geographical location of Castle Trakošćan

2. Structural system

Castle Trakošćan's structural system consists from irregular brick and stone unreinforced masonry walls, domes, vaults and arches built on a rocky foundation. The structure is irregular in both, vertical and horizontal direction in compliance with Eurocode 8 provisions (2, 3) (see *Fig. 3*). Following the renovations and upgrades, the ceiling construction as we know it today consists of masonry arches, and wooden joists. The structural walls of the castle were built with bricks of irregular shapes connected with mortar which has a lot of positive traits as high compressive strength, porosity, hardness, resistance to freezing and thawing. The type of mortar that was used building the castle was lime mortar. Lime mortar got one of the most important roles in the castle stability with its self-healing ability.

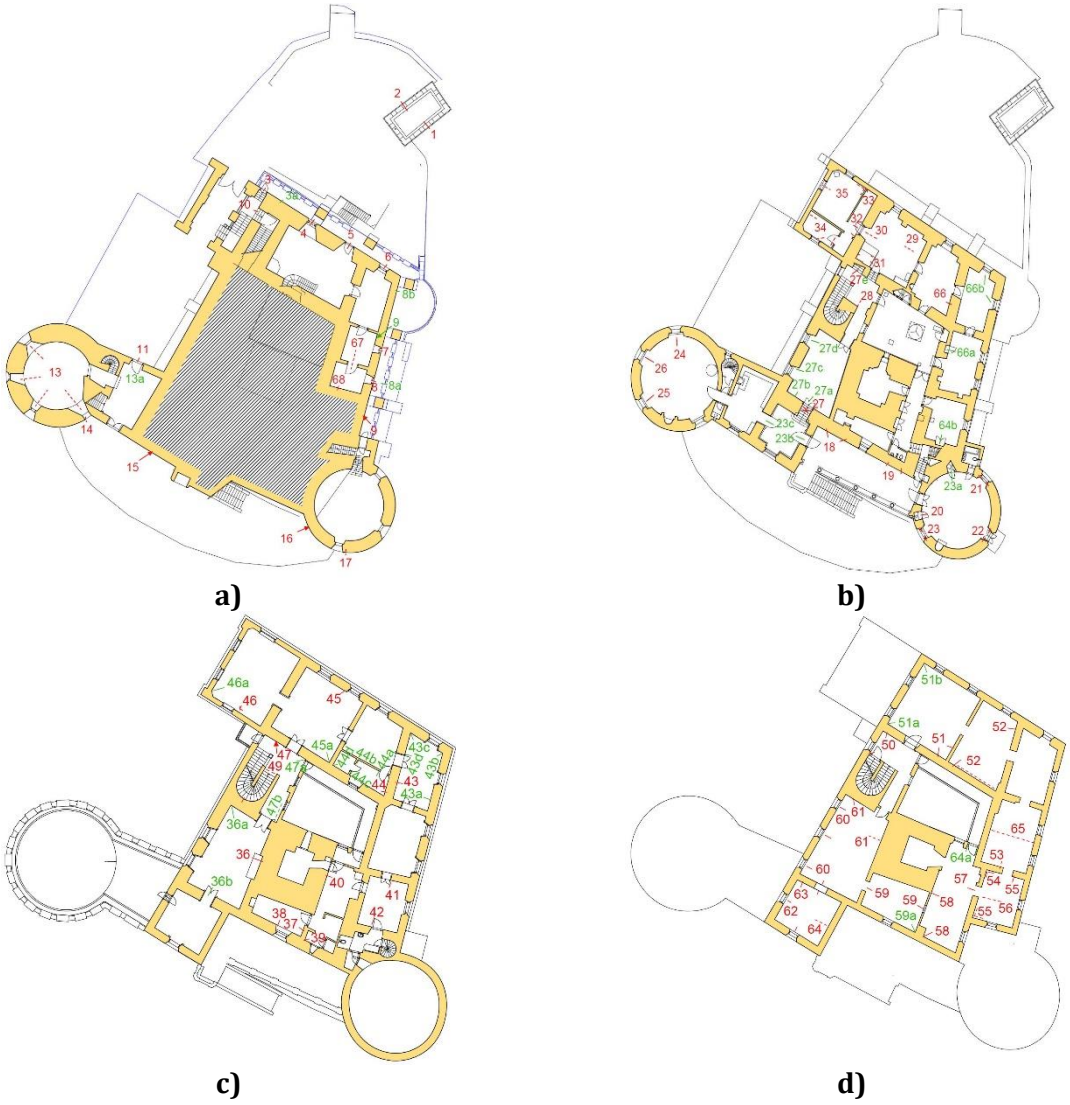

a) **b)**

c) **d)**

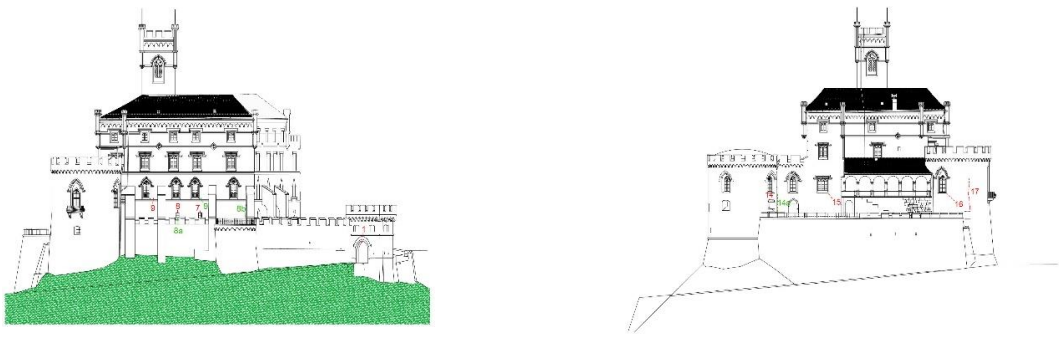

e) **f)**

Figure 3. Castle Trakošćan's map of crack positions observed during the in situ visual inspection: (a) Basement; (b) Ground floor; (c) First floor; (d) second floor; e) east façade; f) south façade; (note: red colored marks designate the damage after M5.5 Zagreb earthquake on March 2020; green colored marks designate damage after M6.2 Petrinja earthquake on December 2020) (4-7)

As observed by in-situ visual inspection (Fig. 3), the Castle suffered from slight structural damage during the M5.5 (VIII °EMS) and M6.2 (VIII-IX °EMS) earthquakes in Croatia, which struck the city of Zagreb on 22 March 2020 and the Pokupsko-Petrinja area on 29 December 2020, respectively (4-7).

3. Numerical model

The numerical model of Castle Trakošćan was made based on the architectural plans in the structural analysis and design software SAP2000 (8) (see *Fig. 4*). The plans contain every dimension and view that is required to make the most accurate model of the structure for the needs of this work. The walls and floors were assigned with 2D "shell" finite elements with mesh density consisting of rectangular elements of 1 by 1 m in size. As the castle was built on a rocky foundation, fixed supports were used. Some of the parts of the castle were left out, such as the wooden stairs in the main tower and the wooden roof on the second floor at the northern side of the castle.

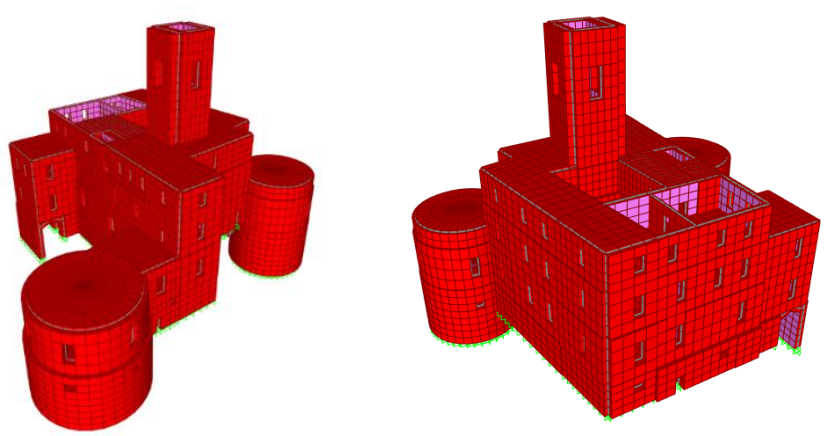

Figure 4. A numerical model of the Castle Trakošćan with 1x1 m finite element mesh density

As for the loads on the numerical model, the model is loaded with its own self-weight, with live load on the floors, with snow load on the roof and the seismic loads given in the form of the elastic response spectrum and four-time history records. Analysis results are only given for the earthquake load combinations.

4. Measurements and material characteristics

4.1. Ambient vibration measurements

During the inspection of the Castle in 2016 and 2021, a non-destructive Horizontal-Vertical-Spectral Ratio (HVSR) method was used for assessment of the results and the local seismic response and vulnerability analysis of the historical Castle Trakošćan (4-7) (see *Tab. 1* and *Fig. 5*). The measurements have showed that the damage caused by the earthquake caused an increase in the period, which indicates reduction of stiffness.

Table 1. Eigenfrequency measurements from years 2016. and 2021.

Year	Eigenfrequency (1st mode)
2016	f = 3,00 Hz (T = 0,33 s)
2021	f = 2,81 Hz (T = 0,36 s)

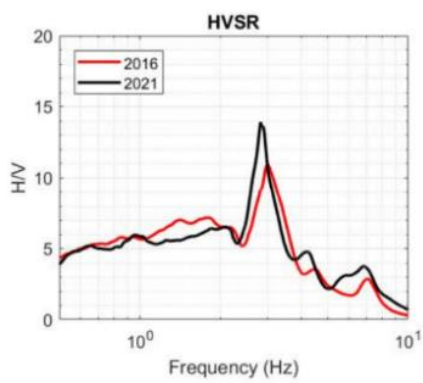

Figure 5. Eigenfrequency measurments of the Castle Trakošćan from years 2016 and 2021

4.2. Material characteristics

The mechanical characteristics of the poor to medium quality Castle's wall textures were estimated based on the bibliographical references (experimental data) e.g. the value of the modulus of elasticity of masonry in historic-monument heritage brick constructions (mostly inhomogeneous wall structures made of solid bricks laid in lime mortar) ranges between 2870.8 MPa and 3751.3 MPa according to S. Arash (9).

When creating a numerical model for the purpose of simulation of the Castle's behavior under e.g. earthquake ground motion, it was necessary to adopt the value of the modulus of elasticity that corresponds well to the results of the Castle's ambient vibration measurements (in the undamaged state of 2016 measurements).

5. Model discretization

Discretization of the numerical model was performed by reducing the finite elements mesh density and checking whether the change in mesh density affects the results of the modal analysis (see *Tab. 2*). The numerical model was first based on 1 by 1 m mesh density of the finite elements which were later reduced. The mesh density of the finite elements was reduced two times, first to 0,5 by 0,5 m, then to 0,25 x 0,25 m (see *Fig. 6*). The modulus of elasticity used for the numerical model discretization was 3200 MPa. Reducing the finite elements mesh density didn't significantly affected the analysis results, so the finite element mesh density adopted for the analysis was 1 by 1 m.

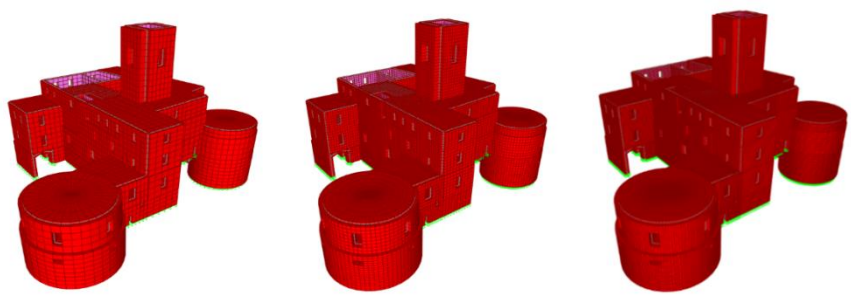

Figure 6. Finite element mesh density; 1 by 1 m (left), 0,5 by 0,5 m (middle) and 0,25 by 0,25 m (right)

Table 2. Modal analysis results according to different mesh density

Mode number	Mesh density					
	1,0 x 1,0 m		0,5 x 0,5 m		0,25 x 0,25 m	
	T (s)	*f* (Hz)	T (s)	*f* (Hz)	T (s)	*f* (Hz)
1.	0,30656	3,26196	0,31179	3,20726	0,31480	3,17657
2.	0,29794	3,35643	0,30275	3,30305	0,30549	3,27348
3.	0,15220	6,57050	0,15809	6,32557	0,16192	6,17579
4.	0,13808	7,24208	0,14287	6,99914	0,14623	6,83876
5.	0,13036	7,67118	0,13161	7,59820	0,13488	7,41384
6.	0,12865	7,77284	0,13027	7,67625	0,13006	7,68905
7.	0,12752	7,84194	0,12861	7,77571	0,12841	7,78754
8.	0,12637	7,91343	0,12110	8,25795	0,12315	8,12003
9.	0,12479	8,01319	0,11955	8,36473	0,11792	8,48001
10.	0,11965	8,35746	0,11753	8,50822	0,11592	8,62689
11.	0,11734	8,52230	0,11219	8,91325	0,11210	8,92092
12.	0,10307	9,70202	0,10914	9,16220	0,11069	9,03390

6. Model calibration

Calibration was performed based on the measurements described above. By changing the value of the modulus of elasticity, it was aimed at the measured value of the vibration period of the structure, with the fact that the modulus of elasticity must be in the range described above. The average eigenfrequency of the measurements from 2016 and 2021 is 2,905 Hz, which is 0,34 s. Modulus of elasticity corresponding to the vibration period of the structure in the amount of 0,34 s is equal to 2900 MPa.

7. Numerical analysis

7.1. Modal analysis

The results of the modal analysis are shown for the first three modes of vibration (see *Tab 3*).

Table 3. Modal analysis results

Mode number		
1.	**2.**	**3.**
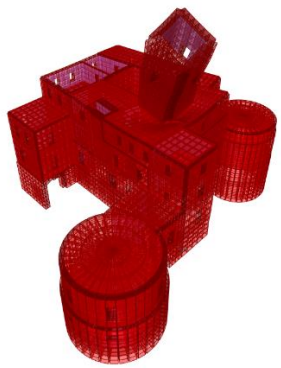	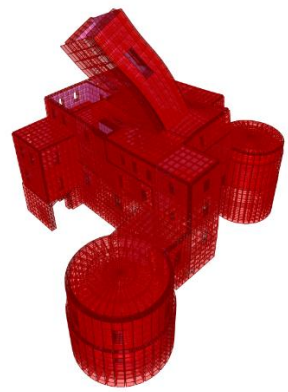	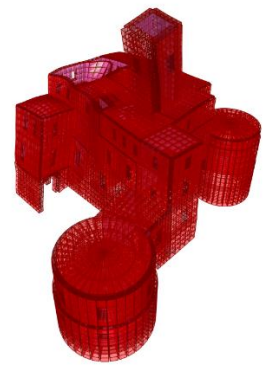
T = 0,33603 s, f = 2,97591Hz	T = 0,32664 s, f = 3,06149 Hz	T = 0,1661 s, f =6,0204 Hz

7.2. Response spectrum analysis

The horizontal elastic response spectrum according to Eurocode 8 was defined using the following parameters: Importance class: 3, ground class: A, peak ground acceleration: 1.8 m/s^2, damping: 5% (see *Fig. 7*). The response spectrum analysis was carried out for horizontal ground movement. The vertical component of the ground movement was not used for the analysis.

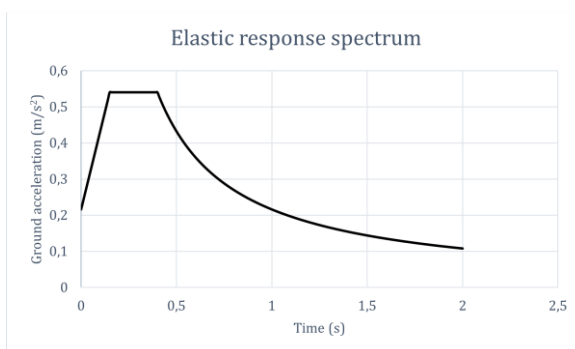

Figure 7. Eurocode 8 elastic response spectrum for the horizontal ground movement

Analysis was carried out based on seismic load combinations and critical places on the castle due to seismic load combinations were established (see *Tab. 4*).

Table 4. Stress results for the seismic load combinations

Seismic load combination	
$G + E_{Ed,x} + 0{,}30 \cdot E_{Ed,y} + \sum \Psi_2 \cdot Q$	**$G + 0{,}30 \cdot E_{Ed,x} + E_{Ed,y} + \sum \Psi_2 \cdot Q$**
Stress	
σ_{max} (kN/m²)	
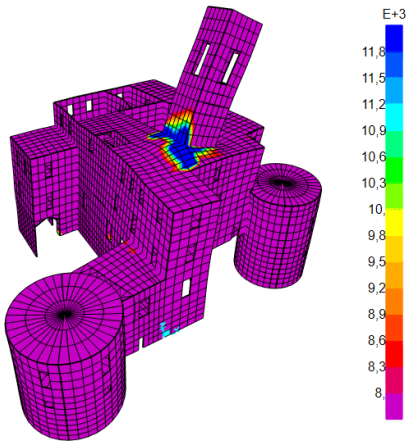	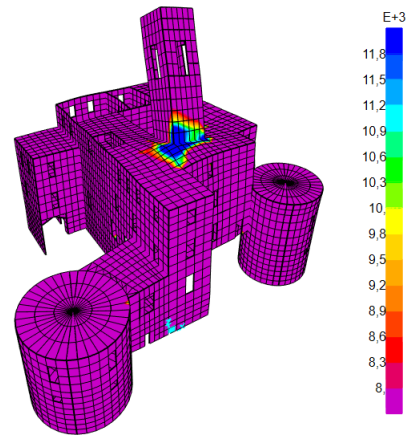
σ_{max} = 11765,85 kN/m²	σ_{max} = 11432,23 kN/m²
σ_{min} (kN/m²)	
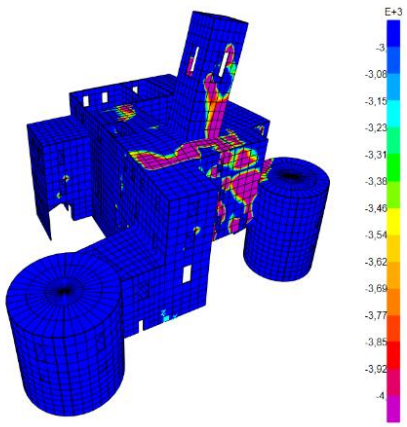	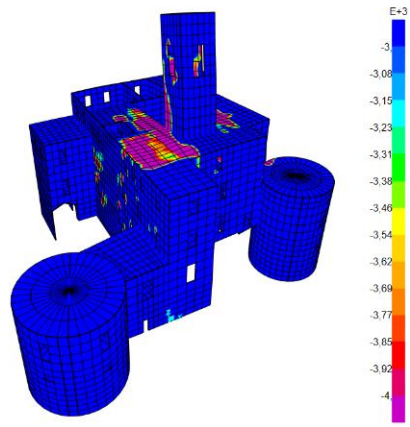
σ_{min} =-3525,55 kN/m²	σ_{min} = -3672,69 kN/m²
σ_{VM} (kN/m²)	
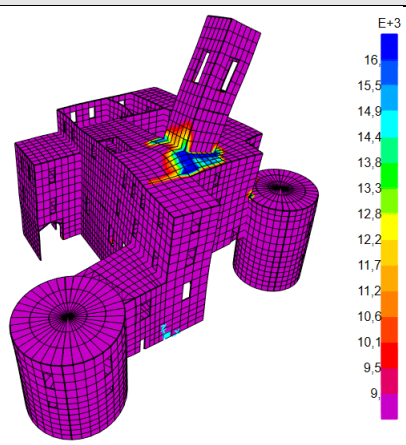	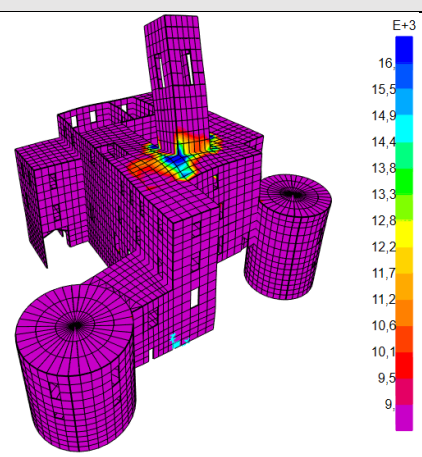
σ_{VM} = 16552,45 kN/m²	σ_{VM} = 15986,85 kN/m²

8. Summary

Based on contemporary structural design code provisions e.g. Eurocode 8, Castle Trakošćan's structure is irregular in both, vertical and horizontal directions, consisting of poor to medium quality historic-monument heritage masonry wall textures, and of wooden joists used for flooring. These structural attributes are unfavourable from the point of view of resistance to earthquakes to which Castle can be exposed to.

The behaviour of Castle Trakošćan under seismic actions was numerically simulated by means of a preliminary model built based on limited knowledge level (EN 1998-3:2000). The model was later calibrated by using the measured eigenfrequency values of the Castle in the undamaged state.

The analysis revealed that the junction of the central tower with the floor structure of the second floor is the most critical place of the Castle, which corresponds well to the earthquake damage observations.

For the purpose of the preliminary model enhancement the next step is to investigate the influence of masonry arches, vaults and domes on the seismic response of the Castle.

Acknowledgments

We are most thankful to the Trakošćan Castle administration for supporting this research. We thank the editor, as well as two anonymous reviewers, for the very constructive criticism on the submitted version of the manuscript. This work has been supported by the Croatian Science Foundation under the project HRZZ IP-2020-02-3531 and "Young Researchers' Career Development Project—Training of Doctoral Students" program.

References

1. Trakoscan.hr. 2022. Dvor Trakošćan. [online] Available at: <https://trakoscan.hr/> [Accessed 18 August 2022].
2. EN 1998-1, 2004. Eurocode 8: Design of Structures for Earthquake Resistance. 1st ed. Brussels: BSi.
3. EN 1998-3, 2004. Eurocode 8: Design of Structures for Earthquake Resistance – Part 3: Assessment and retrofitting of buildings. 1st ed. Brussels: BSi.
4. Markušić, S., Stanko, D., Penava, D., Trajber, D. & Šalić, R. (2021) Preliminary observations on historical castle Trakošćan (Croatia) performance under recent ML ≥ 5.5 earthquakes. Geosciences, 11 (11), 461, 17 doi:10.3390/geosciences11110461.
5. Abrahamczyk, L., Penava, D., Markušić, S., Stanko, D., Hasan Luqman, P., Haweyou, M. & Schwarz, J. (2022) Die Magnitude 6.4 Albanien und Kroatien Erdbeben Ingenieuranalyse der Erdbebenschäden und Erfahrungswerte für die Baunormung. Bautechnik (Berlin, West. 1984), 99 (1), 18-30 doi:10.1002/bate.202100070.

6. Markušić, S., Stanko, D., Penava, D. & Trajber, D. (2021) Use of ambient vibration measurements in Earthquake Protection of Historical Buildings - Case study: Castle Trakošćan, Croatia. In: Nicholas Voulgaris (Chairperson) (ur.) ESC 2021 programme. Online, National and Kapodistrian University of Athens, Greece, str. 53-53.
7. Kesedžić, Marina. (2021) Seismic behavior assessment of historical building on the example of central tower of castle Trakošćan
8. CSI.2020."SAP2000 Structural Analysis and Design v23.3.1."
9. Arash, Sayari. (2012) Mechanical Properties of Masonry Samples for Theoretical Modeling. *15th International Brick and Block Masonry Conference.*